SCHOTT ROBAX®

Life. In front.

Glass-ceramic for fireplaces and stoves

SCHOTT
ROBAX®

Engineered in Germany

Temperature-resistant

Long lifetime

Cleaning solution available

With more than 40 years of experience and over 110 million ROBAX® fire-viewing panels sold, SCHOTT is a leading manufacturer in the area of heat-resistant glass-ceramic.

These figures are backed above all by the know-how, passion, and innovative spirit of our employees. In cooperation with you, our partners, we always find new and individual solutions. And in doing so, you can rely on exceptional quality: Engineered in Germany.

We are your reliable and creative source of inspiration for product, market, and sales ideas that are designed to fascinate you and your customers. Because life and people's experience are what we focus on in everything we do.

SCHOTT is a leading international technology group in the areas of specialty glass and glass-ceramics. With more than 140 years of outstanding development, materials, and technology expertise, we offer a broad portfolio of high-quality products and intelligent solutions that contribute to our customers' success.

schott.com/robax

SCHOTT ROBAX®.
Life. In front.

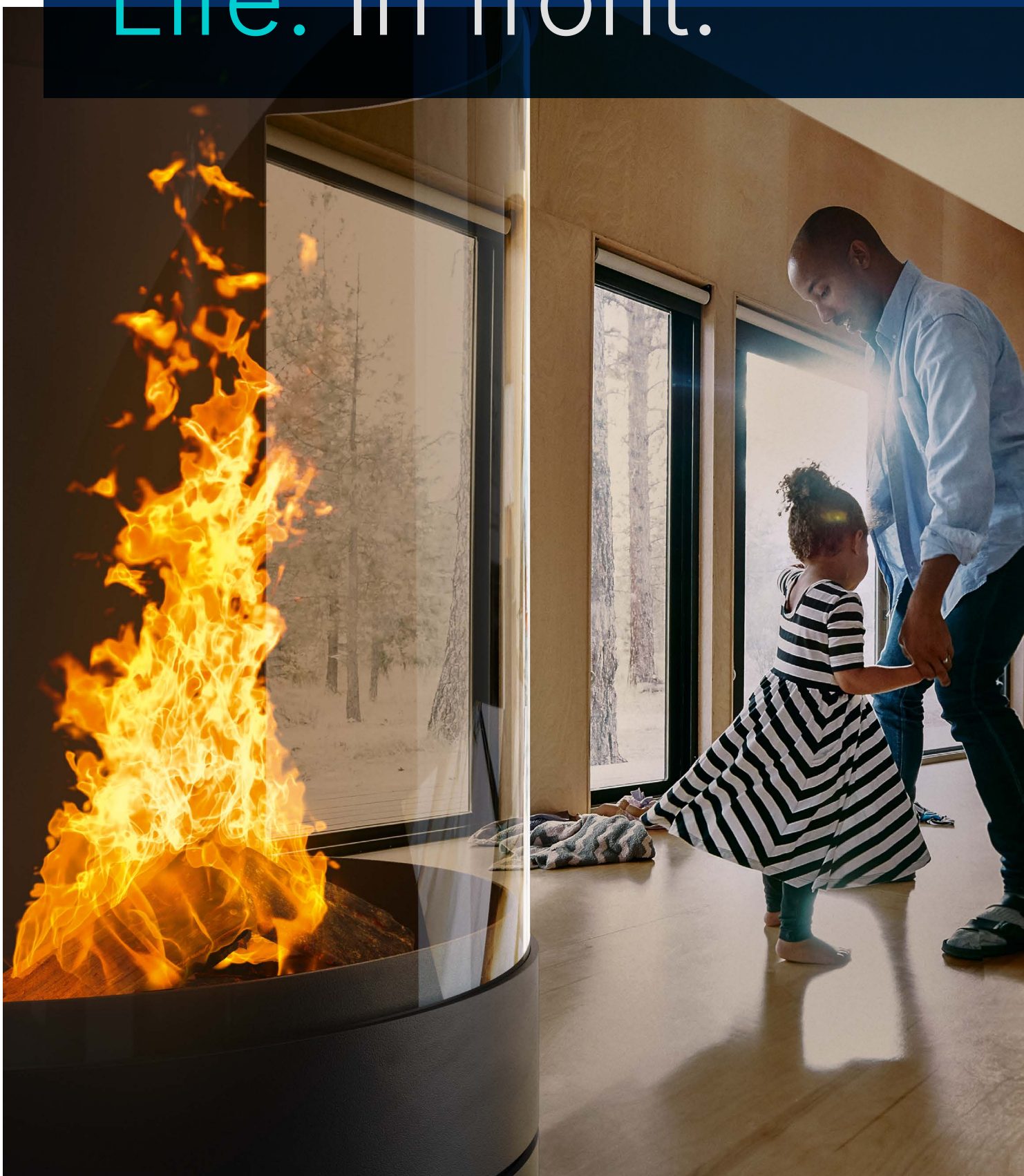

With our ideas, we think and go further. So that you can build fireplaces that are novel and unique. In doing so, the special requirements and wishes of you, our partners, come first. We listen to you. We look forward to challenges and work closely with you to find tailor-made solutions.

SCHOTT ROBAX® fire-viewing panels offer the best prerequisites and properties for a wide variety of designs, high safety and temperature-resistance, optimum transparency and heat transmission, as well as a long lifetime.

In everything we do, everything we develop, we always have one thing in mind: The individual lives of the people in front of the fireplace. What counts for us are their special moments, their well-being – their very personal fireplace experience.

Because every fire-viewing panel makes a very special fire experience possible.

SCHOTT ROBAX® transforms technical expertise into real emotion. The warmth and the play of the flames become a sensual experience and create atmospheric comfort in front of the fireplace. To ensure that this can develop its full effect, our fire-viewing panels are precisely adjusted and are available in various variants and shapes. For an individual and uniquely intense fire experience.

- Optimal staging of the fire from almost any viewing angle thanks to curved and angular bent panels
- Wide range of radii, bending and opening angles possible, in more than 1,000 geometries
- Multiradial bent panels
- 1 x 90° ROBAX® with IDEAL bending edge (IBE): Less curvature of the bending edge for improved strength and optimal design
- ROBAX® with big bending radius (BBR): See-through bending edge for a omprehensive view of the fire

Exclusive ROBAX® panels for the luxury segment

- ROBAX® Giant: Largest curved ROBAX® panel
- Wave shape or more than two bending edges (upon equest)
- ROBAX® Dome

Because many design options mean a lot of design freedom for fireplaces.

Our fire-viewing panels bring out the flames in an incomparable way – and complete the look of the entire fireplace. SCHOTT ROBAX® satisfies the desire for individual designand differentiation with a variety of design options. Whether as a viewing panel or as interior paneling, whether for wood, pellet, or gas firing: The fireplace becomes the stylish centerpiece of any home and the fire the visual highlight.

Decoration

- Various decorative colors for individual designs and logos

Design coatings

- ROBAX® TrueView for gas ovens: Flat panels with antireflective coating

Colored glass-ceramic

- ROBAX® Magic with Signature Impressions: Colored interior glass-ceramic panels for gas fireplaces and stoves
- ROBAX® NightView: Tinted glass-ceramic for pellet stoves, optimized appearance of the flame, and visual protection in off mode
- ROBAX NightFlame®: Semi-transparent black glass-ceramic for wood-burning stoves, provides a familiar flame pattern, and is a visual screen in the off state

Because, in addition to an optimal view of the fire, it is also important to look towards the future.

SCHOTT ROBAX® fire-viewing panels support the functionality of a fireplace by providing optimal heat balance.This also reflects our commitment to developing and producing glass-ceramics with high technical performance.

For example, we use special technical solutions (e.g. functional IR coatings such as ROBAX® IR SuperMax) to promote an efficient combustion process with optimum heat utilization*. In addition, our products are extremely durable thanks to their high quality.

CO_2 emissions reduction

As a globally operating company, we aim to make an active contribution. For years, we have therefore been working to reduce the carbon footprint of our energy-intensive production (Scope 1 and 2 under the GHG Protocol) as well as our value chain (Scope 3). Decarbonization is a long-term undertaking and firmly embedded in our corporate strategy.

*The IR coating of the ROBAX® IR SuperMax fire-viewing panel reflects more infrared heat radiation back into the combustion chamber than an uncoated ROBAX® fire-viewing panel of the same thickness in an identical stove. As a result, under comparable conditions, the stove reaches the temperature range favorable for clean combustion more quickly. This thermal support can depending on the stove design, fuel quality, and operation, support more complete combustion and help reduce CO and particulate matter emissions compared with appliances using an uncoated fire-viewing panel under the same conditions. The optimized combustion process and higher panel temperature can also promote a pyrolysis-like effect, thereby contributing to reduced soot deposits on the panel.

Statements refer to the internal comparison of ROBAX® IR SuperMax with an uncoated ROBAX® fire-viewing panel of the same size and thickness in an identical stove setup. The effects described depend on stove design, fuel quality, and operation. No statement is made regarding the finished appliance's compliance with emissions limits. Tested in an internal comparison under regular operating conditions in accordance with a documented test procedure; details of the conditions and methodology are available in the corresponding test report (available upon request).

For us, a close partnership is the best basis for success. Together with you and according to your wishes, we get ideas off the ground and implement them. To achieve this, we support you with a comprehensive service so that you, in turn, can offer your customers first-class products, solutions, and user experiences.

The SCHOTT ROBAX® service experience

Research and development
Innovation is our passion. As a technology group, we strive to achieve the highest level of technical progress in all areas through forward-looking development partnerships. Always with the aim of achieving new and innovative solutions for you.

Quality
Since 1979, we have been producing in series. The result: More than 110 million ROBAX® glass-ceramic panels sold. Our management system according to DIN EN ISO 9001 (for quality) and DIN EN ISO 14001 (for environment) ensures that your requirements as well as official regulations and specifications are met. To ensure an integrated management system, we can also provide external certificates for occupational health and safety (ISO 45001) and energy management (ISO 50001).

Worldwide sales service
You benefit from sales staff in more than 30 countries who speak your language and respond quickly and flexibly to your customers' wishes. Your particular service advantage: You always have a clearly defined contact person.

Logistics
Our goal: Top delivery performance. With customized logistics concepts, we do everything in our power to ensure that you are supplied reliably and as quickly as possible.

Application service
We supply more than just glass-ceramic. Our service package always includes the know-how gained from more than 40 years of global service experience. With comprehensive consultation, an application laboratory, and supporting tests, we help you to reduce development costs and save time.

Marketing service
Our knowledge of end consumers and global sales markets helps you to open up new sales territories and expand your success.

Geometries

Flat
ROBAX® panels

For the realization of your fireplaces, you have a wide range of formats and dimensions with ROBAX® flat panels.

Random sheets

Random sheets (jumbo formats) are large-format glass-ceramic sheets without further proessing, especially with respect to the edges. These serve as the base material for cut-to-size panels.

Jumbo formats are available in the following sizes:

Edge length	Thickness*	Packaging	Quantity per packing unit
1,954 x 1,100	4	Wooden crate	45 sheets
1,954 x 1,100	5	Wooden crate	35 sheets

All dimensions in mm.
All dimensions are exterior dimensions. Tolerances according to technical delivery specifications.
Geometries outside the product range available upon request.
* Other thicknesses available upon request.

Cut-to-size panels

ROBAX® can be cut-to-size according to your requirements. We will be happy to provide you the minimum and maximum dimensions upon request.

We offer thicknesses of 4 mm and 5 mm for transparent ROBAX® fire-viewing panels.

For other design options, other specifications may apply. We will be happy to discuss your questions and advise you based on your requirements.

Curved
ROBAX® 3D panels

These panels allow for a generous view of the fire and expand your design freedom in an expressive way.

The glass-ceramic can be manufactured in many variants according to your wishes and is supplied with edge processing and a standard corner radius.

Product range	
h panel height	100 – 800
ℓ_A arc length	210 – 1,100
r bending radius	225 – ∞
Glass thickness	4 and 5

All dimensions in mm.
All dimensions are exterior dimensions. Tolerances according to technical delivery specifications. Geometries outside the product range available upon request.

One angle – angular bent ROBAX® 3D panels

Angular bent panels open up exciting perspectives for an optimal view of the fire and for the overall design of the fireplace.

In addition, an individual finishing of the glass-ceramic is possible, such as decoration. The panels are supplied with edge processing as well as with a standard corner radius and can be individualized according to your design specifications.

Product range	
h panel height	230 – 815
ℓ_1 long side section	220 – 1,100
ℓ_2 short side section	60 – 590
α bending angle	90° – 160°
Glass thickness	4 and 5

All dimensions in mm.
All dimensions are exterior dimensions. Tolerances according to technical delivery specifications. Geometries outside the product range available upon request.

ROBAX® with big bending radius (BBR): The new fire perspective

Angular bent ROBAX® fire-viewing panels with a big bending radius provide the best possible, unobstructed view of the fire.

Your advantages:

- See-through bending edge
- Comprehensive, clear view of the fire
- Almost completely natural fire experience

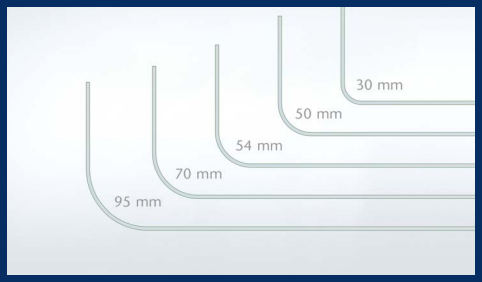

Two angles – angular bent ROBAX® 3D panels

Develop fascinating design solutions thanks to a wide range of optics: With multiple bending edges and different bending angles, side section lengths, and panel heights. The fire-viewing panel is supplied with edge processing and a corner radius. To provide an optimal view of the fire from all sides.

Product range	
h panel height	230 – 815
ℓ_1, ℓ_3 side section	60 – 420
ℓ_2 center section	250* – 900
α bending angle	90° – 160°
Glass thickness	4 and 5

*Center length dependant on the bending angle:
250 mm for 2 x 90° or 170 mm for 2 x 135° angular bent panels.

All dimensions in mm.
All dimensions are exterior dimensions. Tolerances according to technical delivery specifications. Geometries outside the product range available upon request.

Do you have extra-ordinary ideas and are in search of special solutions?

Upon request, we are able to develop additional, innovative geometries in cooperation with you. We look forward to your challenges.

Decorative ROBAX® panels

With a variety of decorative elements, we meet your demand for creativity and originality. Thanks to their breathtaking colors, decorations, patterns, and effects, our transparent and colored fire-viewing panels can be optically refined and thus set special accents.

a | ROBAX® with an individual logo
b | ROBAX® with decoration in „pure black“

Decoration

Flat, curved, and angular bent ROBAX® panels with decoration are available upon request. The decoration can serve a functional as well as decorative purpose.

The colors available are shown on the right. ”Amber gold“ and ”satin silver“ are very transparent colors with a glitter effect, while the other colors are rather opaque.

The colors shown may not accurately depict the actual color. Certain substrate and color combinations are excluded or only available upon request. We will be glad to send you an original color sample upon request.

*Only for logos.

In addition, the matte color combinations “matte stone grey and mystic black” and “matte stone grey and opaque black” can be delivered. In each case, “matte stone grey“ is the color of the logo.

Upon request, we supply glass-ceramic panels with an individual logo.

ROBAX® Magic:
Especially for gas fireplaces

ROBAX® Magic with Signature Impressions is a collection of decorative glass-ceramic panels for the inner lining of the combustion chamber of gas fireplaces. It creates beautiful reflections that make the flames appear larger and the firebox deeper – for a fascinating play of flames.

Give your gas fireplaces a very special look: With ROBAX® Magic with Signature Impressions in different noble substrates, decoration colors, and effective surface structures.

Examples of material colors, surface structures, and decorations

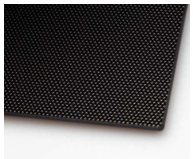
black & nubbed

grey & smooth

white & nubbed

black & grooved

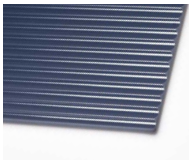
bluegrey & grooved

black & marble gold

Key benefits of ROBAX® Magic with Signature Impressions

- Highly resistant decorative glass-ceramic for interior paneling.
- Flames look bigger, chamber looks deeper (enhancing flame effects).
- No discoloration compared to enamel.
- Brilliant reflection; classy, high-end contemporary look.
- More design options.
- Various new surface structures.
- Decorations upon request.
- Easy to clean.

ROBAX®
Night Design Portfolio

Design your fireplaces to be a visual experience at any time of the day or year. When turned on or off. Benefit from these advantages with the innovations in our Night Design Portfolio.

ROBAX® NightView:
Especially for pellet fireplaces

Through the specially tinted glass-ceramic viewing panel, the flames look darker and calmer – for an authentic fire experience. When the fireplace is turned off, the translucent black panel obscures the view into the combustion chamber, soot, and ash residues.

This product innovation from SCHOTT ROBAX® won the German Design Award 2022.

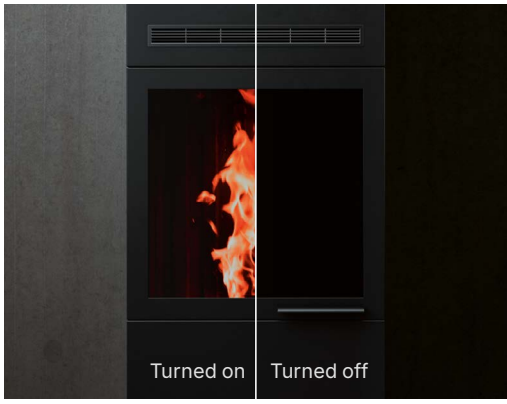

Coziness on. Soot off.

ROBAX NightFlame® – The first fire-viewing panel that makes ash almost invisible.

With ROBAX NightFlame®, the fireplace is the focal point in any living room. The semi-transparent black fire-viewing panel shows the authentic wood fire in the evening. In the morning, however, it hides residues – a modern, discreet privacy screen.

This product innovation from SCHOTT ROBAX® won the Red Dot Award 2023 in the category “Product Design”.

ROBAX NightFlame® curved

Enjoy an even more intense flame exprience from multiple perspectives with the round bent fire-viewing panel ROBAX NightFlame® curved. The usual genuine fire experience and the discreet visual protection against ash and soot remains. Curved panels not only offer the observer an unobstructed view of the fire from several sides. They also turn a fireplace or stove into an eye-catching design statement in the living room.

Key benefits of ROBAX NightFlame® and ROBAX NightFlame® curved

As fireplace manufacturer

- Expand your product portfolio and set yourself apart in the market.
- Easily replace a transparent ROBAX® panel with ROBAX NightFlame® due to identical properties.
- End-users recognize the value of ROBAX NightFlame® and are willing to invest more.

As end-user

- Visually appealing fireplace, even when the fire is off. The dead-front effect creates a premium, stylish look.
- Embrace almost unchanged flames.
- Nearly invisible soot and ash allows you to cleaning on your own schedule – giving you more flexibility.

Processing options

In addition to the different substrate appearances and decoration possibilities, you have further options to have SCHOTT ROBAX® individually processed. This rounds off the fire-viewing panels – with the usual precision and quality.

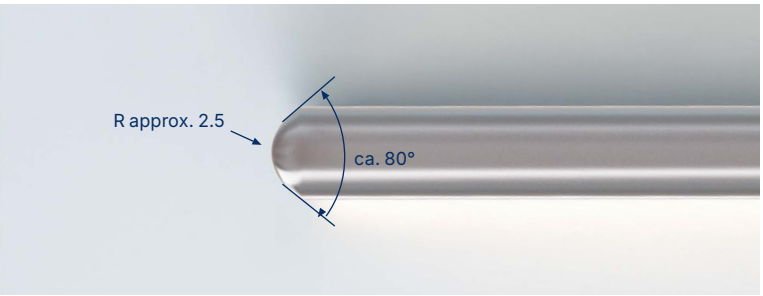

Fine grinding for an optimum effect

Whether you are looking for an attractive appearance or the highest level of functionality, a wide range of processing and finishing options give ROBAX® the finishing touch for a complete product tailored to your needs.

Edges are round as standard (U-grinding) with round corners.

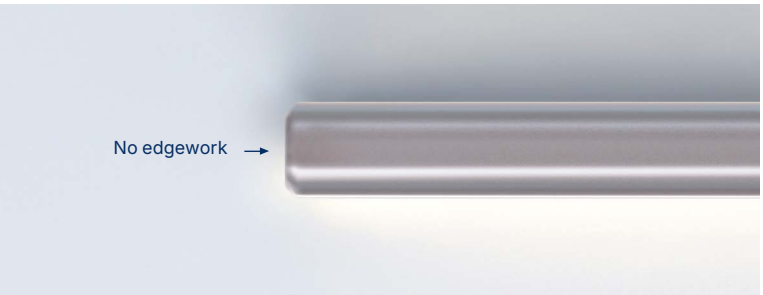

Edge and corner finishing

The edges of ROBAX® panels are provided with a corner radius and U-grinding as standard. For small cut-to-size panels (without decoration), the edges are manually treated as standard.

Manually treated edge for small cut-to-size panels (without decoration).

Drilled holes

These are available in diameters of 6 mm or more. The position of the holes is subject to certain limitations with respect to the edges and corners of the panel, as well as the position of these holes in relationship to each other.

This limitation generally depends on:

- Nominal thickness of the glass-ceramic
- Panel dimensions
- Diameter of the hole
- Shape of the panel

We will be happy to provide you with further details upon request.

Technical features

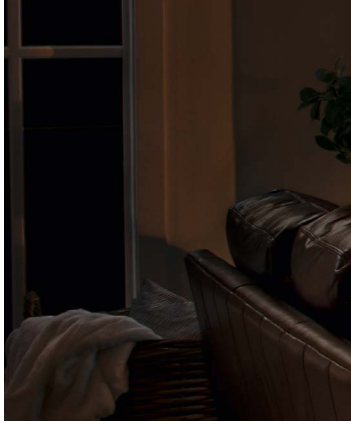

General

In addition to its attractive appearance, SCHOTT ROBAX® is mainly known for its “intrinsic” values. Regardless of its thermal, mechanical, chemical, or optical properties – the glass-ceramic gives a reliable appearance. The following technical information applies to ROBAX® in general. Unless otherwise indicated, the data provided is intended as a point of reference.

Impact and flexural strength

The impact resistance of ROBAX® depends on the kind of installation, the size and thickness of the panel, the kind of impact, the geometry of the panel, and especially on the drilled holes and their position on the ROBAX® panel.

Therefore, information on impact resistance must always be evaluated individually according to the installation situation. Please feel free to contact us if you require further support.

The flexural strength is tested in accordance with DIN EN 1288 Part 5, with the surface in the normal state of use.

Comments on mechanical properties

Values presented regarding the strength of glass and glass-ceramic must also take into account the special properties of these materials.

In the technical sense, glass and glass-ceramic are “ideally elastic” yet brittle materials in which there are no flow patterns. When they come into contact with materials of the same hardness, this causes surface damage in the form of fine nicks and cracks. When glass and glass-ceramic are subjected to a mechanical load, the build-up of critical stress at the points of such nicks and cracks cannot be relieved by plastic flow, as is possible with materials like metals.

The consequence of this behavior is that the structurally based high strength of glass and glass-ceramic (≥10,000 N/mm^2) is practically irrelevant. It is reduced by the effect of unavoidable surface defects (in the case of unprotected surfaces) to a practical value of approx. 20 to 200 N/mm^2 bending strength, depending on the surface state and test conditions. This must be taken into account accordingly during installation and handling.

The strength of glass and glass-ceramic is therefore not a material constant (as its density, for example), but depends on the following criteria:

- Processing condition of the panel (incl. edge finish, boreholes, etc.).
- Usage condition (type and distribution of surface defects).
- Time-related conditions or, alternatively, the duration of the effective load.
- Surrounding conditions.
- The area subject to load, as well as the thickness of the panel.
- The installation method of the panel.

Its strength is also subject to statistical distribution in accordance with the type and distribution of the surface defects.

Thermal properties

ROBAX® glass-ceramic panels show a near-zero thermal expansion even under thermal load.

Coefficient of mean linear thermal expansion $\alpha_{(20–700\ °C/\ 68–1{,}292\ °F)}$	$(0 \pm 0{,}5) \times 10^{-6}/K$

Resistance to temperature differences (RTD)

The RTD value measures how well a material can resist temperature differences within a defined area, such as the temperature difference between the hot area in the center of a panel and the cold edge area (room temperature). No breakage caused by thermal stress occurs at a maximum temperature of $^{*}T_{max} \leq 700$ °C (1,292 °F).

Resistance to thermal shock (RTS)

The RTS value measures a hot panel's ability to with stand a sudden thermal shock by cold water (15 °C / 59 °F). No breakage caused by thermal stress occurs at a maximum temperature of $T_{max} \leq 700$ °C (1,292 °F).

$^{*}T_{max}$: Maximum temperature on the exterior side of the panel, that means the reverse side of the heat source, at the hottest point.

Temperature/time load capacity

The temperature/time loading limits determine the permissible temperature for set usage times at which no breakage caused by thermal stress occurs.

The temperature values refer to the hottest points on the outside of the panel. One must make sure that these temperature/time loading limits are not exceeded. Taking resistance to thermal gradients and thermal shock into account, the following applies:

Temperature/time load capacity	
590 °C (1,094 °F)	1,600 hours

Valid for inhomogeneous heating.

Chemical properties

The chemical composition of SCHOTT ROBAX® complies with the requirements for glass-ceramic in accordance with EN 1748 Part 2.

Hydrolytic class (DIN ISO 719): HGB 1

Acid resistance (DIN 12116): Min. class S 2

Alkaline resistance (in line with ISO 695): Min. class A 1

Surface modifications caused by use

ROBAX® has a high degree of resistance to surface attacks. In individual cases, however, surfaces can experience changes under critical conditions, for instance corrosive combustion gases (formation of acid at high temperatures). In such cases, practical tests should be conducted before using ROBAX®.

Installation recommendations and manufacturer specifications

General

1. Even under thermal load, ROBAX® glass-ceramic panels show near-zero thermal expansion. For this reason, the different thermal expansion of the various framing materials in relation to the ROBAX® fire-viewing panel must be taken into consideration for the design of the entire fireplace.

2. Additionally, the possible manufacturing tolerances of the frame and the glass-ceramic panel have to be considered.

3. Contact pressure which leads to bending stress on the panel must be eliminated. This can be achieved, for example, by limiting torque or with a limiter that limits screw-in depth.

4. As a marginal torsion of the frame construction cannot be excluded, it must be prevented that this torsion is transmitted onto the ROBAX® panel by using a thermally stable, permanently elastic sealing (e.g. fiberglass or mineral fiber fabrics).

5. If – due to constructive reasons – the pressing of the fire-viewing panel in the frame is inevitable, then the contact pressure must be evenly distributed (never at single points) over the circumference of the panel.

6. The panel must not come into direct contact with metal frame parts. It is recommended to use a thermally stable, permanently elastic seal.

7. Additionally, the instructions of the seal manufacturers must also be followed, in particular with regard to contact pressure of materials.

8. During installation, it is essential to protect the glass-ceramic panel, especially the edge areas, from potential damage (impacts, bumps, and scratches).

9. Generally, SCHOTT advises against gluing the fire viewing panel. Nevertheless, if a high-temperature-resistant silicone is applied on the panel, the elastic limit of the silicone must be considered. Due to the excellent bonding properties of glass to silicone, exceeding the elastic limit can lead to cracked or broken fire viewing panels. Any glue visibility that may occur is not a defect worthy of complaint.

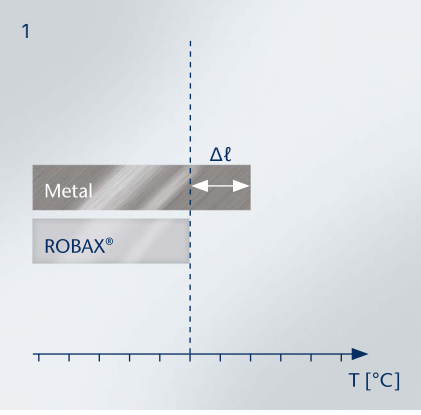

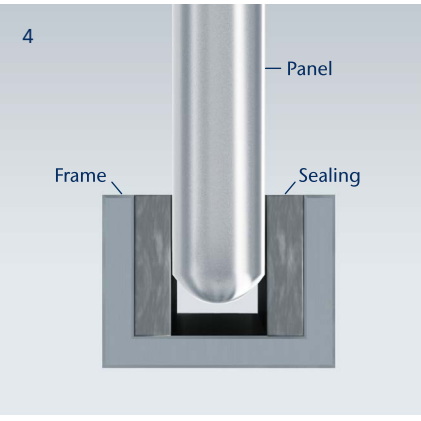

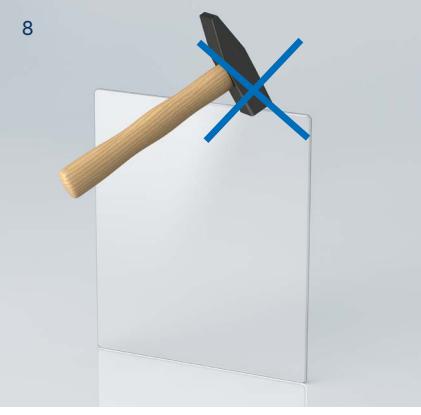

Frameless installation

A frameless design is characterized by a concealed substructure, onto which the ROBAX® fire-viewing panel is mounted and which is therefore not visible when the fireplace door is closed. Thus, the panel edges are not enclosed by a protective frame and may be exposed to additional mechanical stress (impacts, bumps, etc.). Therefore, the following aspects have to be taken into consideration when designing a frameless door – in addition to the general information:

1. The weight of the glass-ceramic panel is held either by a supporting bar or completely by screws. For every contact between the fire-viewing panel and the metal (frame construction behind the panel, supporting bar, and/or screw lead-throughs), a suitable and thermally stable material that is also flexible (e.g. fiberglass or mineral fiber fabrics) must be used as an intermediate layer.

2. Punctual strains, caused for example by the weight of the ROBAX® fire-viewing panel „resting“ on the screws or screw lead-throughs, should be kept to a minimum, such as by using screw sleeves that at the same time prevent unacceptable contact between the glass-ceramic and metal.

3. The drilled hole diameter in the fire-viewing panel must allow for thermally-induced expansion of metal components (lead-throughs, supporting bars, etc.). During assembly, please ensure that the quality of the edges of the drilled holes is flawless.

4. The minimum distance (a) between drilled hole edge and outer edge of the panel has to be at least twice the thickness of the fire-viewing panel and greater than half of the drilling diameter (Ø) (valid for panels 4 and 5 mm thick). Potential drilling hole diameter is between 6 and 150 mm. Detailed information regarding the configuration of drilled holes is only possible with knowledge of the specific frame design.

5. Bending forces, which are exerted when the panel is latched, depend largely on the position of the drilled holes for the latching mechanism and the amount of manual pressure exerted by the user needed for latching. Mechanical strength is not an issue, providing that the required pressure exerted on the panel does not exceed 40 N.

2

3 | 4

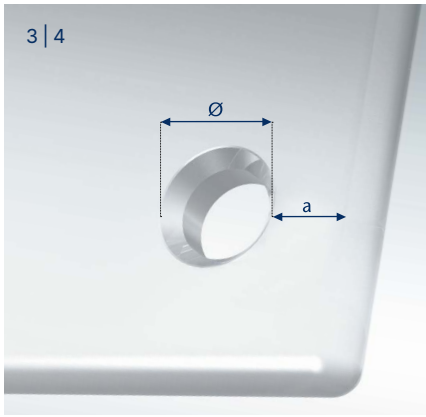

5

Installation of angular bent fire-viewing panels

In the following description, you will find some valuable and important hints for the assembly of angular bent fire-viewing panels (especially fire-viewing panels with one or two 90° angles) with regard to the construction of the doorframe:

1. For angular bent ROBAX® panels, an optimal frame construction, especially in the bending edge area, is characterized by the following criteria (see figure 1):
   - No frame profile (1) in the bending edge area of the glass-ceramic panel (P)
   - Separate frame profile strips in the bending edge area (2) in order to avoid transmission of thermal expansion from the edge area of the frame onto the fire-viewing panel
   - Recommendation of additional slits (3) in the frame profiles close to the bending edge for better compensation of thermally- induced torsions of the frame and absorption of deviations of the frame or panel geometry due to tolerances
   - Long holes in the frame profile (4) to avoid tensile stress in the edge area of the ROBAX® panel
   - Rounded or chamfered corner geometry (5) of the supporting/inner frame
   - Suitable sealings (6) between the doorframe and the inner side of the glass-ceramic panel as well as between the frame profile and the outer side of the panel

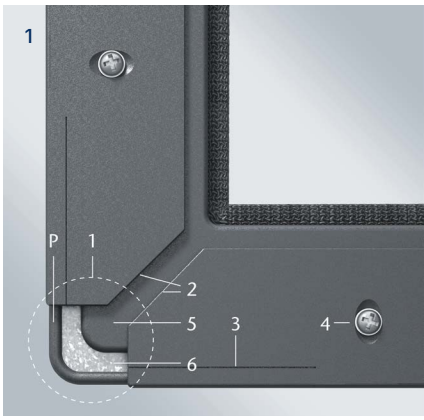

2. In addition, it is important to ensure that the vertical edge of the panel (see red area in figure 2) is also supported by a frame bar.

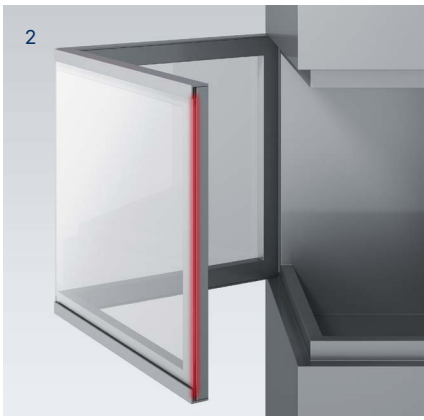

3. If, however, the vertical panel edge remains free, it may come to mechanical overloading of the panel in the event of a dynamic load (e.g. when the fireplace door is slammed). That would result in the following scenario (figure 3 shows a top view of the installed fire-viewing panel):
   - Closing movement of the hinged door in the stated direction of rotation (1)
   - When the frame is engaged or stopped, the panel receives an impulse in the indicated direction (2)
   - The long leg of the ROBAX® panel is held back by its fixation in the door frame (3); but the short leg can, in principal, move in the direction of movement if there is no vertical frame bar as a counter bearing (2)
   - Consequence: Increased risk of fracture due to occurring tensile stresses position (4)

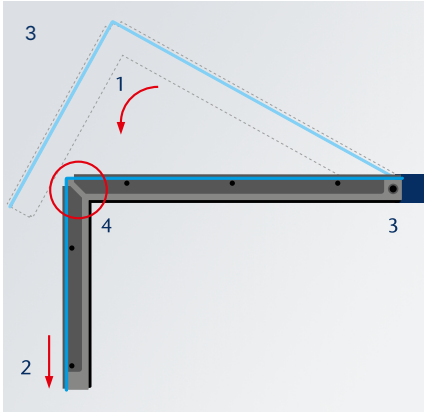

4. This scenario is avoidable with a suitable frame construction. The vertical edge of the glass-ceramic panel should always be protected, at least in the corner area of the panel.

Cleaning recommen-dations

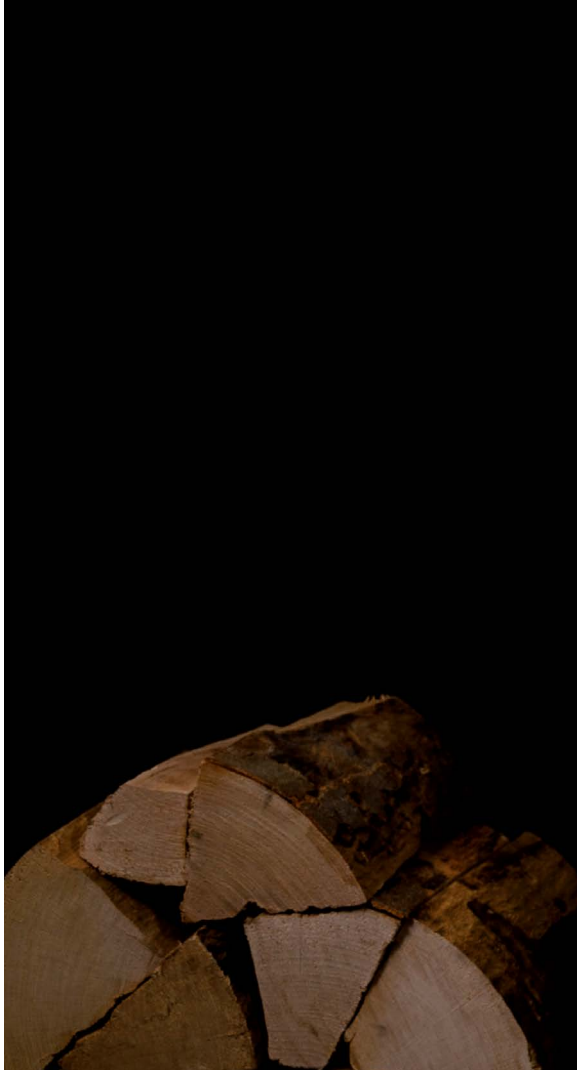

SCHOTT highly recommends the SCHOTT ROBAX® Dry Wiper to wipe uncoated fire-viewing panel surfaces. If you are using conventional glass-cleaning products, remove any soil, dirt, or grime according to the instructions and ensure that the glass-ceramic's surface is cold. Remove any remaining cleaning residue to avoid a chemical reaction when ROBAX® panels are exposed to heat.

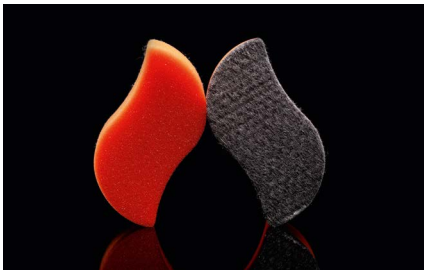

SCHOTT ROBAX® Dry Wiper:
For the uncoated side

Soft cloth:
For the coated side

DO NOT use scouring pads, abrasive cleaners, or scouring agents because they damage the glass-ceramic's surface.

Clean the coated side of the products ROBAX® Mirror, ROBAX® IR Max, and ROBAX® IR SuperMax (one-sided coating), as well as both sides of the product ROBAX® TrueView (two-sided coating), with a soft cloth and standard window glass cleaner only.

For more information, please visit our website:
schott.com/drywiper

Should you ever need to replace a SCHOTT ROBAX® fire-viewing panel, the old panel should be disposed of as normal domestic waste. Please do not disposed of it in the glass recycling bin!

In any case, please observe the regional regulations for waste disposal.

More detailed information on the ROBAX® products shown in this brochure can also be found in the individual data sheets:
schott.com/en-gb/products/robax-p1000332/downloads

schott.com/robax

SCHOTT AG, Hattenbergstr. 10,
55122 Mainz, Germany

ENGLISH ROW 09/2026 ali